RAINSTICK

Technical Installation Guide

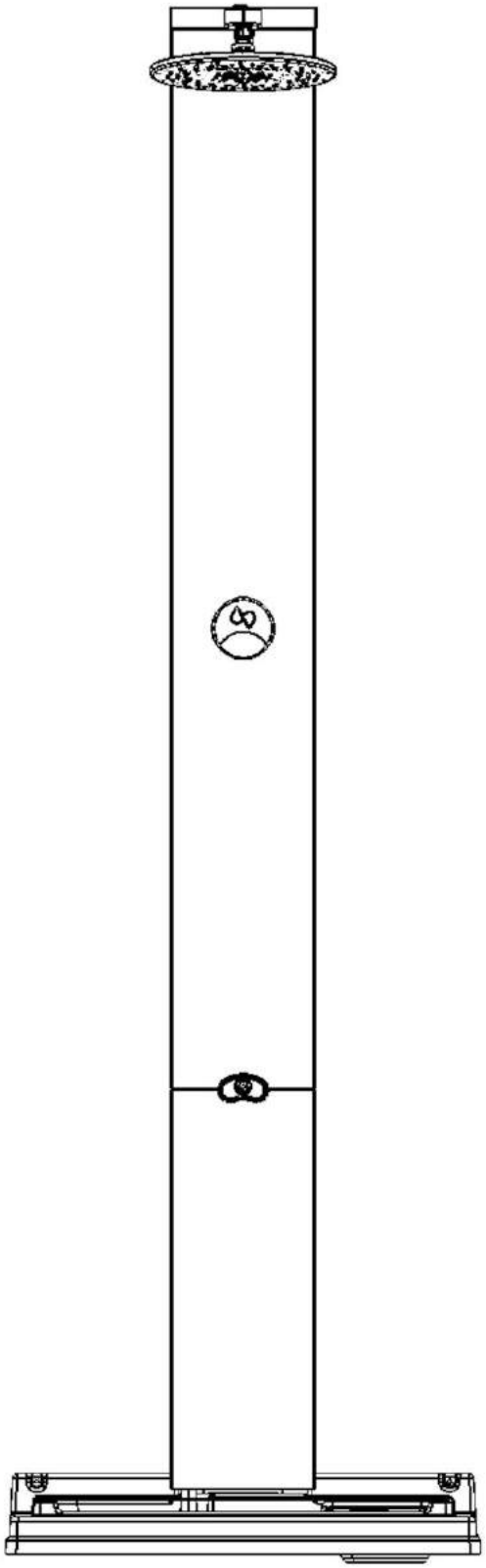

View our **How To install** video on YouTube

TABLE OF CONTENTS

What Comes in the Box and Helpful Tools for Installation 2

Prerequisite Checklist Prior to Installation and Important Notes to Consider 3

Getting to Know Your RainStick and Parts List 4

Suggested Shower Stall Components Not Included 5

Step 1: Unbox the RainStick 6

Rough-in

Step 2: Determine the Location of Installation and Water / Electrical Supply 7

Step 3: Position the Sanitary Drain (P-Trap) and Install the Reservoir 7

Shower Surround

Step 4: Install a Compensating Layer, Shower Base, and Shower Curb 8

Step 5: Waterproof the Shower Area and Install the Floor / Wall Tile 8

RainStick Installation

Step 6: Mount the Utility Bracket and Route the Water / Electric Supply 9

Step 7: Prepare the RainStick for Mounting 9

Step 8: Dry-fit and Mount the RainStick 10

Step 9: Route and Connect the Water / Electrical Supply 10

Step 10: Connect Sensor Wire, Water Hoses, and Micron Screen 11

Step 11: Attach the Pump Intake Manifold 12

Step 12: Connect the Dispensing Compartment Hose and Power 13

Step 13: Attach the Bottom Enclosure and the Reservoir Passive Plug 13

Step 14: Position and Attach the Foot Spout 14

Step 15: Reattach the Main Controller and Top Enclosure 15

Step 16: Connect the Shower Arm and Showerhead Connector 16

Step 17: Connect the Showerhead and place the Reservoir Cover Plate 17

Step 18: Complete the Installation 18

Architectural: Water and Power Rough-in Elevation and Reservoir Dimension Levels 19

Architectural: Surrounding Tile to Reservoir Installation Details 20

Architectural: Flooring and Reservoir Detail / Plumbing: Drain to P-Trap Parts Assembly 21

Plumbing: Showerhead and Arm Assembly / Electrical: Field Wiring Diagram 22

RainStick Shower Warranty 23

RAINSTICK SHOWER

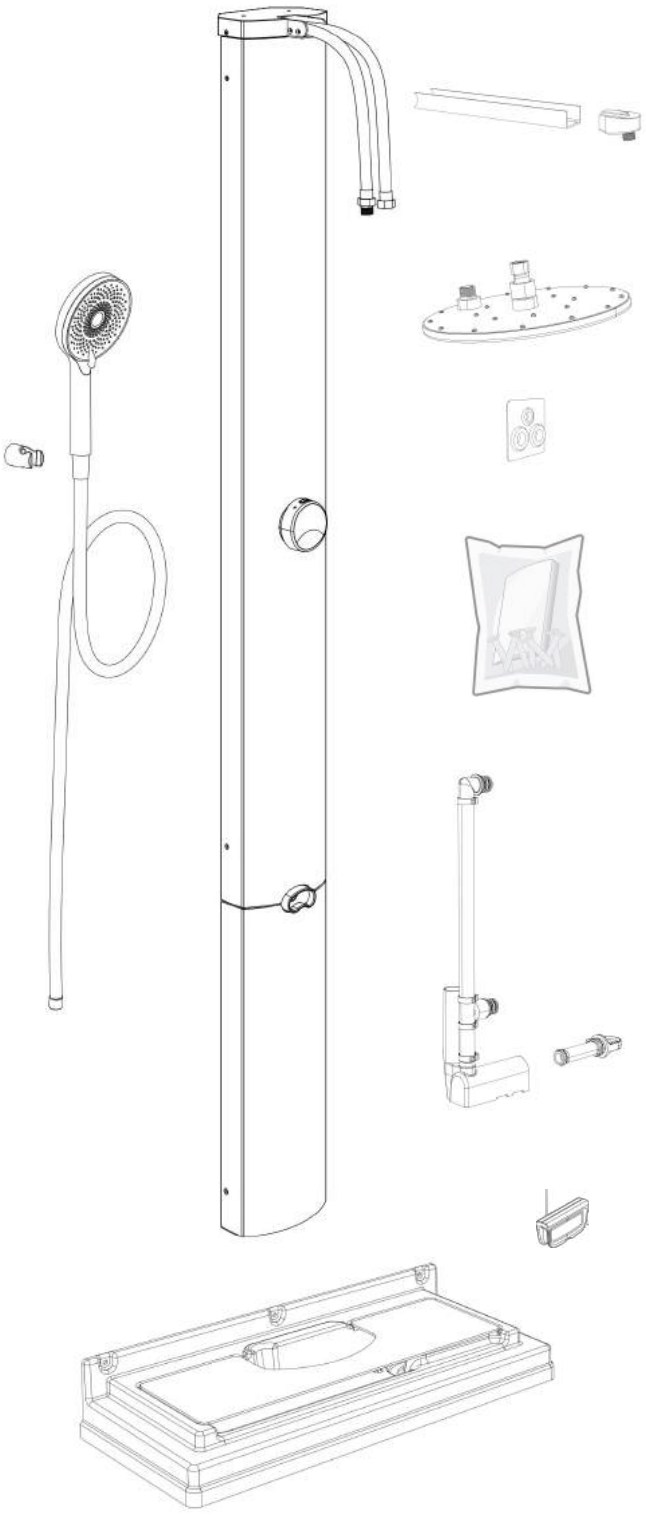

Images are for illustrative purposes only. Store instructional guides for future reference.

HELPFUL TOOLS



Safety Glasses



Wrench



Power Drill



Hole Saw and Drill Bit



Cutter



Writing Tool



Screwdriver



Tube Cutter

For safety and ease of installation, RainStick recommends the use of these tools.

BEFORE YOU START





Review the following guides.

PREREQUISITE CHECKLIST PRIOR TO INSTALLATION

ARCHITECTURAL

- ❏ A tiled shower floor; RainStick is not intended for bathtubs
- ❏ A shower ceiling that is at least 85 inches (2159 mm) in height
- ❏ A curbed shower floor unless installing to be ADA compliant
- ❏ If it is intended to operate the shower in areas of hard water (above 200 ppm temporary hardness), a scale inhibitor/water softener should be fitted.

ELECTRICAL

- ❏ GFCI-protected electrical circuit (120V, 60Hz) with a waterproof rated electrical wire (main junction box included within product for field connection)
- ❏ A WiFi 2.4 GHz network (only required should the RainStick App be installed and paired)
- ❏ A smartphone with Bluetooth and a WiFi or cellular network connection (only required should the RainStick App be installed and paired)

PLUMBING

- ❏ Hot water supply of 130°F (55°C) at the point of dispense (recommended), or 120°F (49°C) at minimum.
- ❏ Hot/cold inlets - 1/2 inch diameter (38 mm)
- ❏ Minimum water pressure hot/cold inlets at 43.5 PSI (3 bar)

BEFORE YOU BEGIN

Observe all local plumbing and building codes.
Inspect the water supply piping for damage. Replace as necessary.

IMPORTANT NOTES TO CONSIDER

1. A shower cavity that is not fully enclosed or is open on one or more sides may affect the efficiency of the installed RainStick.

2. The RainStick reservoir requires the P-trap to be at a designated location for it to align to its drain. Inspect the intended area of installation to ensure that there are no obstructions at the subfloor level or below.

3. The front catchment of the reservoir needs to remain unobstructed at all times. The maximum allowable floor tile thickness is 12 mm.

4. RainStick uses its own *Original Cleaning Product* to maintain hygiene and cleanliness while optimizing performance. RainStick is not intended to be used with any other cleaning product. **Using other products will result in a void of warranty.**

5. For ADA compliant installations, please contact us at support@rainstickshower.com for further information and adaptation support.

PLEASE CONTACT RAINSTICK

For installation help or issues with the product at support@rainstickshower.com.

GETTING TO KNOW YOUR RAINSTICK

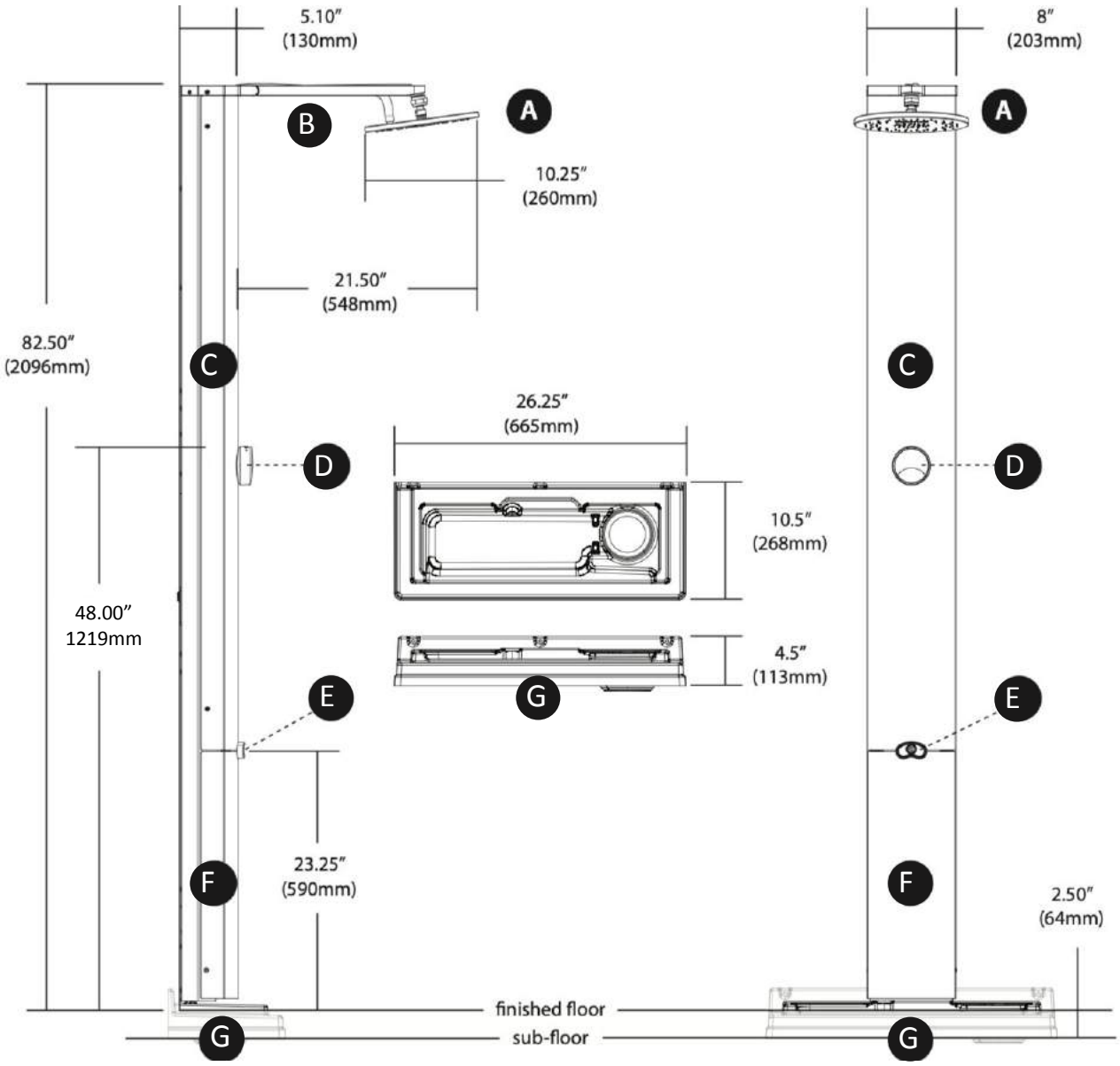

PARTS LIST

A. Showerhead
B. Shower Arm
C. Top Enclosure
D. Main Controller
E. Foot Spout / Handheld Shower Connector
F. Bottom Enclosure /Dispensing Compartment
G. Reservoir

RESERVOIR COMPONENTS

(Included however not shown above)

H. Reservoir Drain
I. Reservoir Cover Plate
J. Pump Intake Manifold
K. Micron Screen
L. Reservoir Passive Drain Plug

SUGGESTED SHOWER STALL COMPONENTS NOT INCLUDED

DESCRIPTION	IMAGE
Prefabricated Sloped Shower Base *(**REQUIRED:** Schluter KERDI-Shower-LTS KSLT965/1930S)*	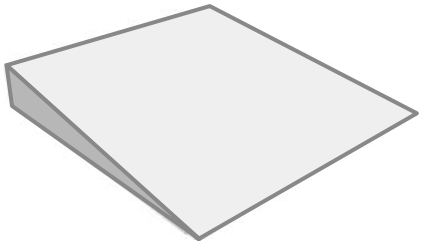
Prefabricated Waterproof Shower Curb	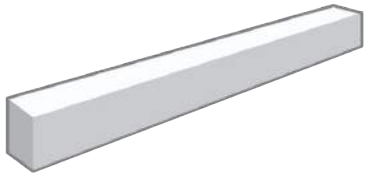
Waterproofing Strip Seals	
Single-Component Sealing and Bonding Compound	
Unmodified Thin-Set Mortar *(**SUGGESTED:** Schluter All-Set Thin-Set Mortar)*	
Compensating Layer *(**SUGGESTED:** Plywood, Cement Board, High Density Foam, etc.)*	

STEP 1: Unbox the RainStick

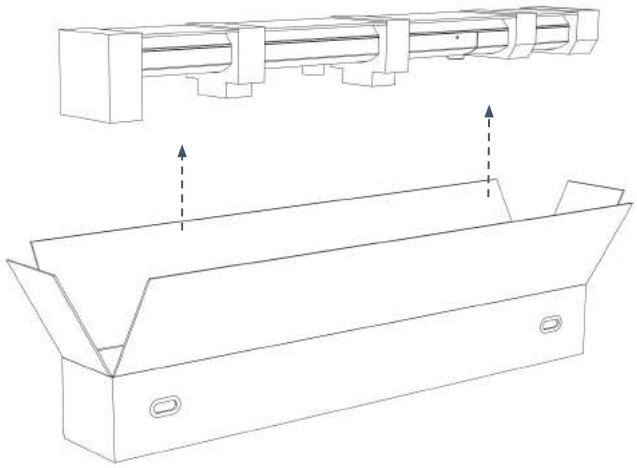

A

Gently lift the RainStick out of the box.

NOTE: We strongly recommend that this be done by two people.

B

Turn the RainStick facing up before laying it on a soft, non-abrasive, surface.

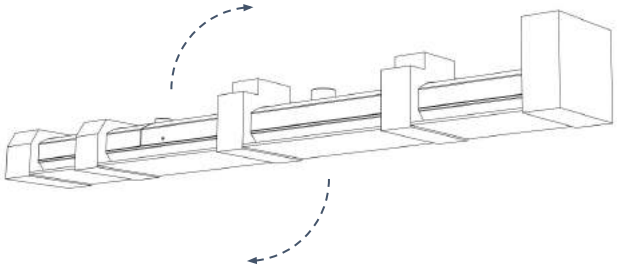

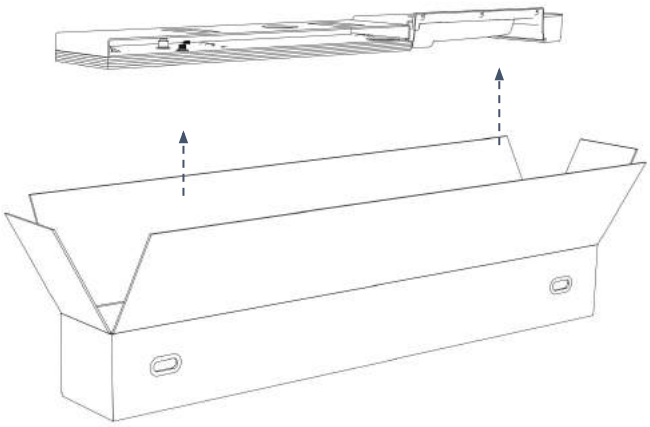

C

Remove the component trays below and place aside.

STEP 2: Determine the Location of Installation and Water / Electrical Supply

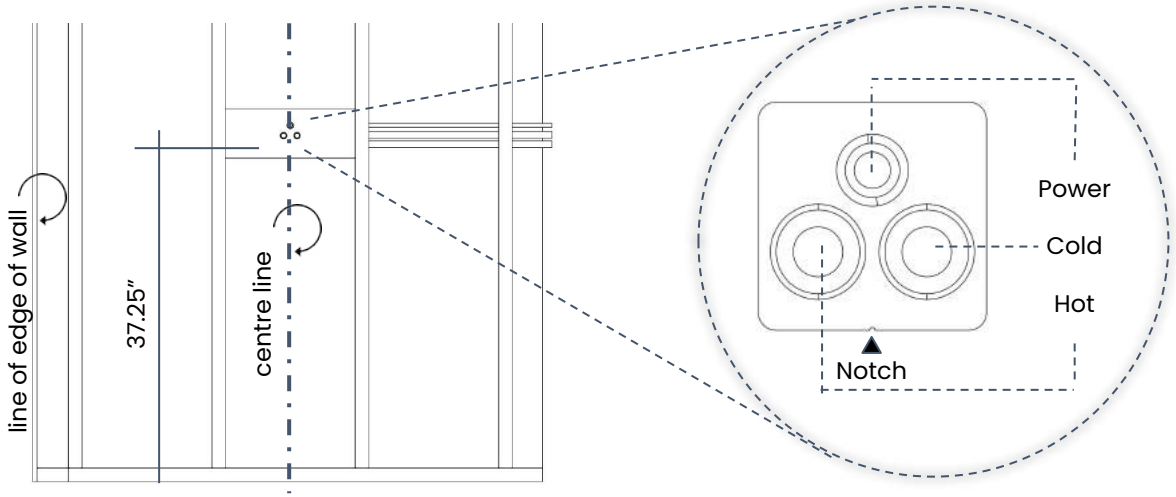

From the centre point of installation (where the sub-floor meets the wall), vertically measure **37.25” (946 mm)** and mark this measurement with a writing tool. Using the **Utility Bracket** provided, align the **Notch** to the wall marking. Trace the location of the rough-ins and use a hole saw to cut these areas. Horizontally route the water and electrical supply accordingly, ensuring that the RainStick’s mounting points are clear of obstruction. **Refer to page 19 for further details.**

NOTE: When finding the centre point of installation, account for the membrane and tile offset of all surrounding finished walls and curb.

STEP 3: Position the Sanitary Drain (P-Trap) and Install the Reservoir

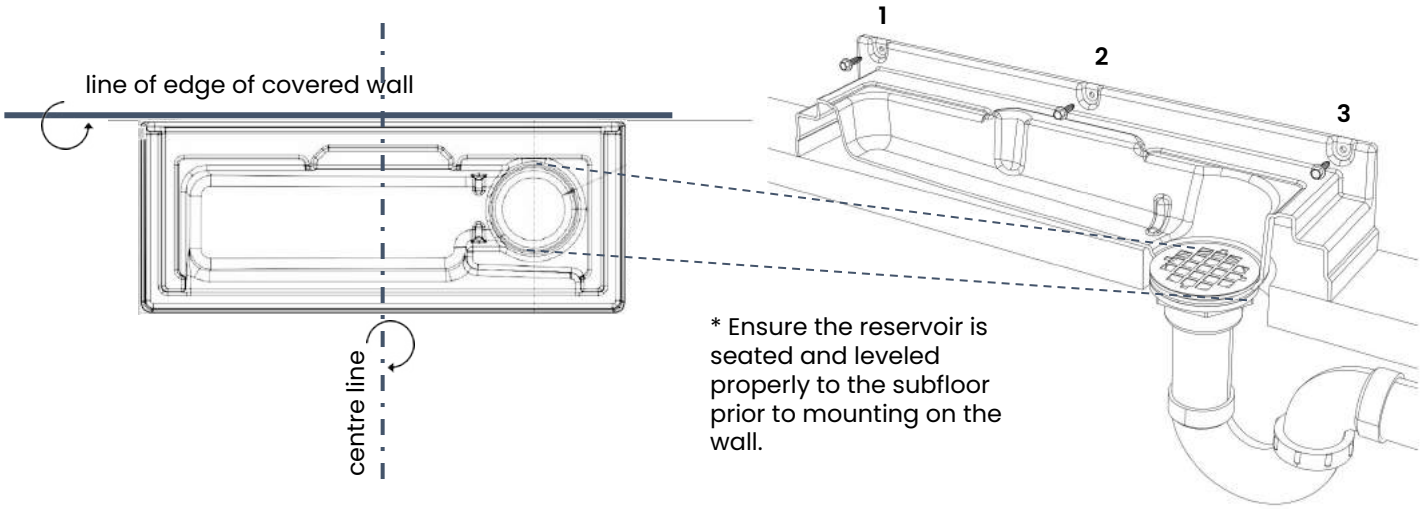

Once all rough-ins have been routed to their designated location, install the wall coverings in the shower area. Determine the location of the P-trap below the sub-floor by using the **Reservoir** provided and aligning its midpoint to the centre point of installation. Trace the location of the **Reservoir Drain** and use a **5”** hole saw to cut a hole on the sub-floor surface. Once the P-trap is aligned to the cut location, use plumbers putty to properly seal the reservoir drain to the P-Trap. Use three wood screws to secure the reservoir to the wall. **Refer to page 21 for further details**.

STEP 4: Install a Compensating Layer, Shower Base, and Shower Curb

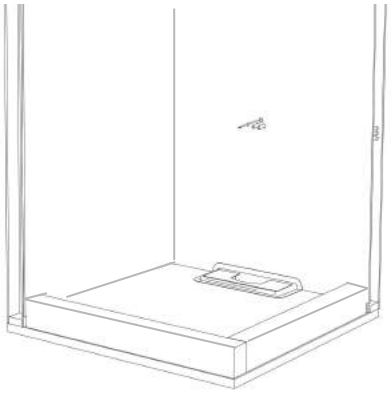

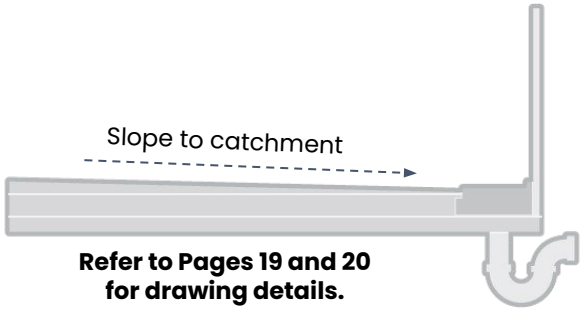

Refer to Pages 19 and 20 for drawing details.

Raise the floor level to the indicated line of the reservoir at **¾" (19 mm)** using a compensating layer (ex. cement board, plywood, or high density foam). Next, pre-measure and cut the location of the reservoir on the prefabricated sloped shower tray before adhering it to the raised floor. Once ready, Install or build a shower curb around the shower area where applicable. **Refer to page 19 and 20 for further details.**

STEP 5: Waterproof the Shower Area and Install the Floor / Wall Tile

A

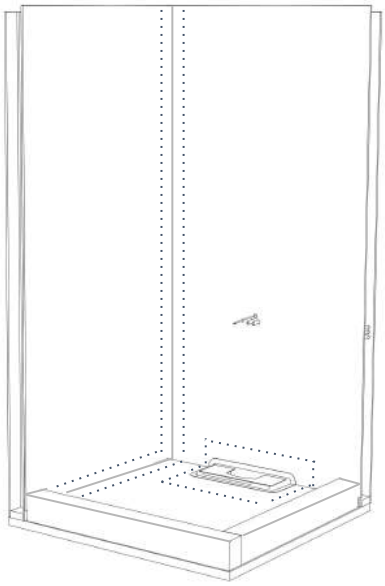

B

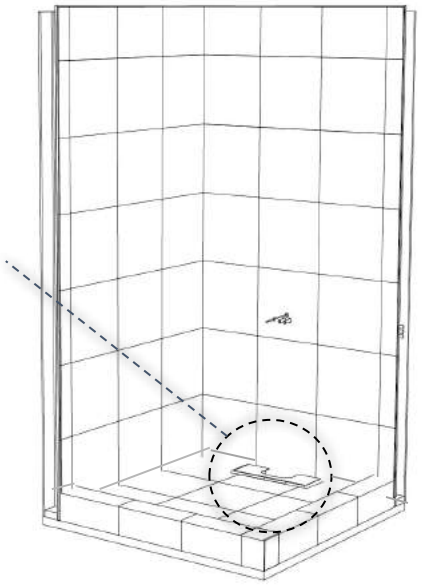

Refer to Page 21 for drawing detail.

Install waterproofing membrane to all areas required and apply sealing compound with strip seals along the reservoir's edges to ensure it is adequately adhered to the prefabricated shower base. This will provide a water-tight seal. Install your floor and wall tiles when ready using a **½" x ½"** U-shaped trowel.

The wall and floor tile thickness should be within **8 to 12mm** to ensure that the RainStick aligns to its reservoir, and to guarantee that the front catchment of the reservoir is clear of obstruction. To prevent water from collecting on both sides of the reservoir, build up the tile at a slope to direct water to the catchment. **Refer to page 21 for further details.**

STEP 6: Mount the Utility Bracket and Route the Water / Electric Supply

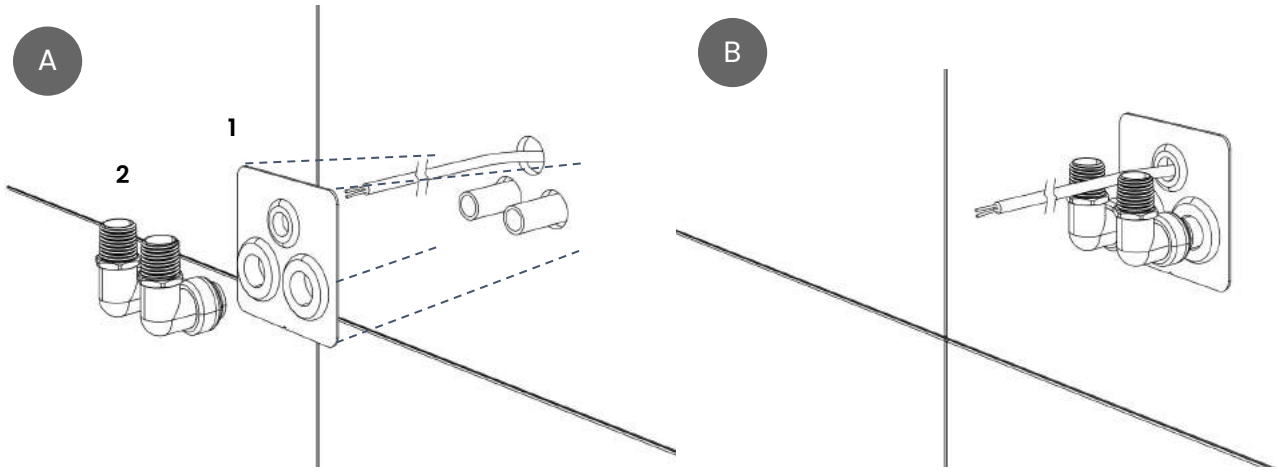

Using a **1" (25 mm)** ceramic hole saw, route the rough-ins through the wall tile. Use a bonding compound to align and adhere the provided **Utility Bracket** to the wall, routing and securing the rough-ins through its designated holes. Use the provided rubber grommets to seal off any gaps and allow the bonding compound to set prior to cutting the water lines to **2" (50 mm)** from the tiled wall. Attach the hose quick connectors provided when ready.

STEP 7: Prepare the RainStick for Mounting

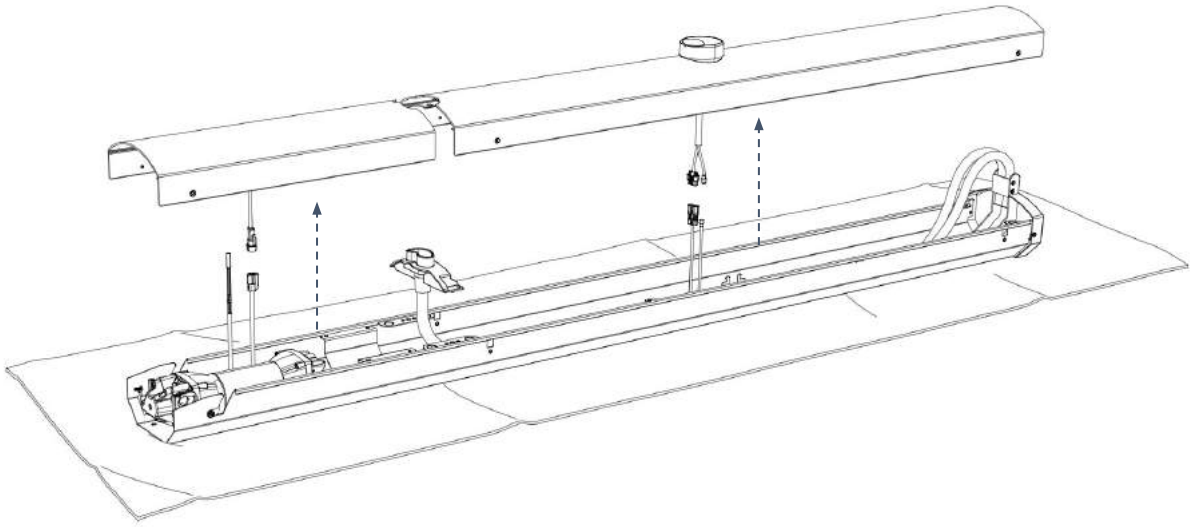

With the RainStick laid down, gently lift and detach the **Top and Bottom Enclosures** and place them on a soft surface, temporarily lifting the **Foot Spout** aside with its hose attached.

NOTE: We strongly recommend that this step be done by two people.

STEP 8: Dry-fit and Mount the RainStick

A

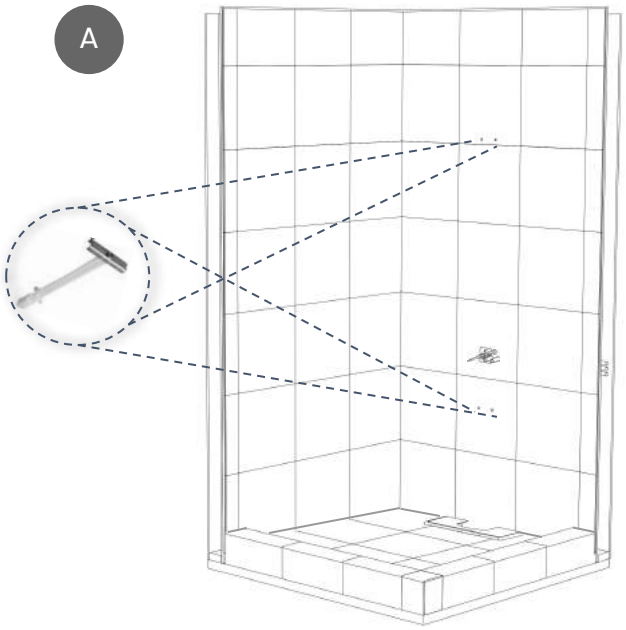

B

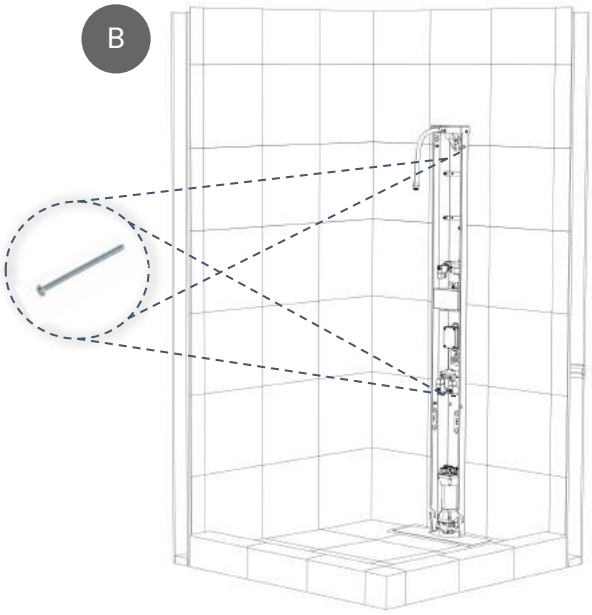

Using the **Reservoir Cover Plate** as a guide, gently lift the RainStick and dry-fit it against the shower wall, ensuring the RainStick is vertically aligned and levelled. Use a writing tool to mark the locations of the **four (4) mounting holes** located at the back of the RainStick. Lay the RainStick back onto a soft surface and use a **½" (13 mm)** ceramic drill bit on the markings made. Insert the provided **Toggle Bolt anchors** into the holes and mount the RainStick to the wall when ready using the provided **Toggle Bolts**.

STEP 9: Route and Connect the Water / Electrical Supply

A

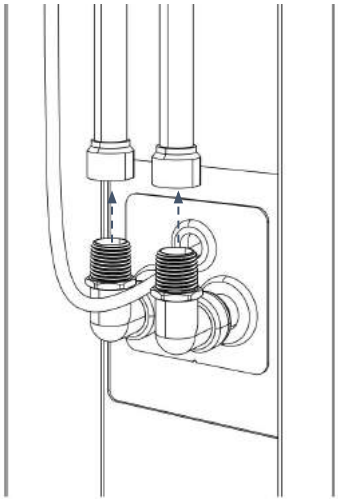

B

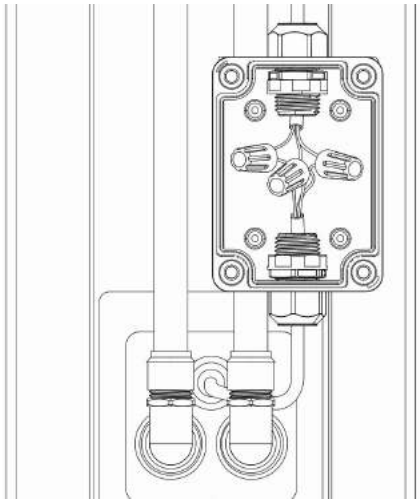

Connect and secure the house water supply to the RainStick using the provided connectors and use plumber's tape on the water lines to avoid leakage. Have a certified electrician connect the power connection by removing the junction box cover and using the provided wire nuts. **Refer to page 22 for further details.**

STEP 10: Connect Sensor Wire, Water Hoses, and Micron Screen

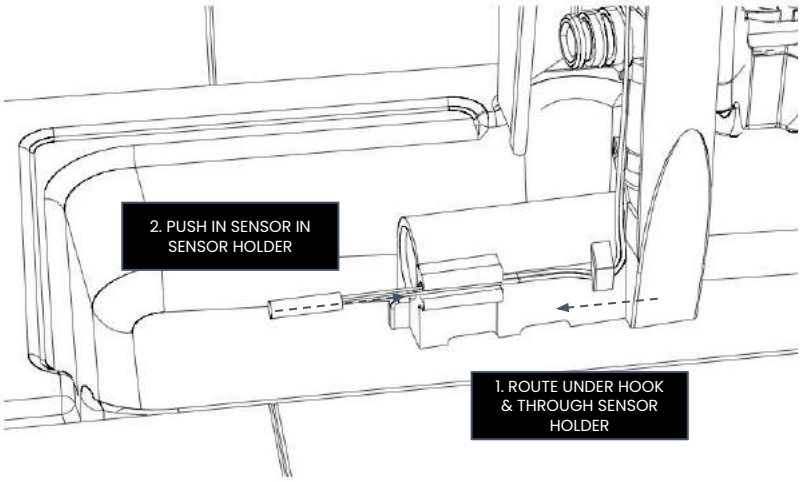

A

Locate the **Sensor wire** tucked inside the RainStick and extend it in its full length. Locate the **Pump Intake Manifold** provided and pull out the **Micron Screen** attached. At the back of the Pump Intake Manifold, route the sensor wire down and across the back of the pump intake and pressure fit the **Sensor** to the sensor holder.

B

Locate the two water hoses inside the RainStick and place them inside the opening located at the back of the **Pump Intake Manifold**.

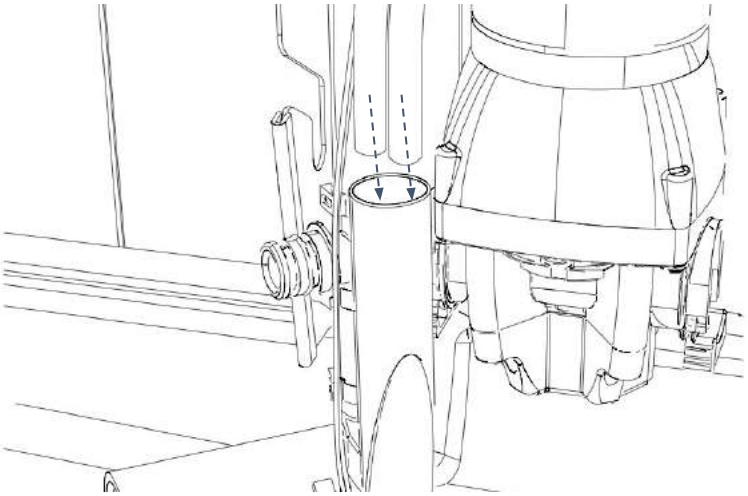

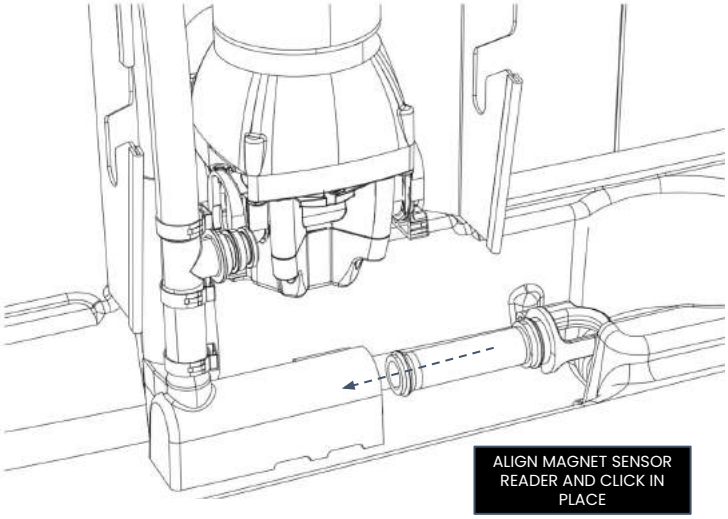

C

Re-attach the **Micron Screen** to the Pump Intake Manifold by pressing and locking it firmly into place. The sensor magnet will need to meet the **Sensor**, to indicate a successful reconnection.

STEP 11: Attach the Pump Intake Manifold

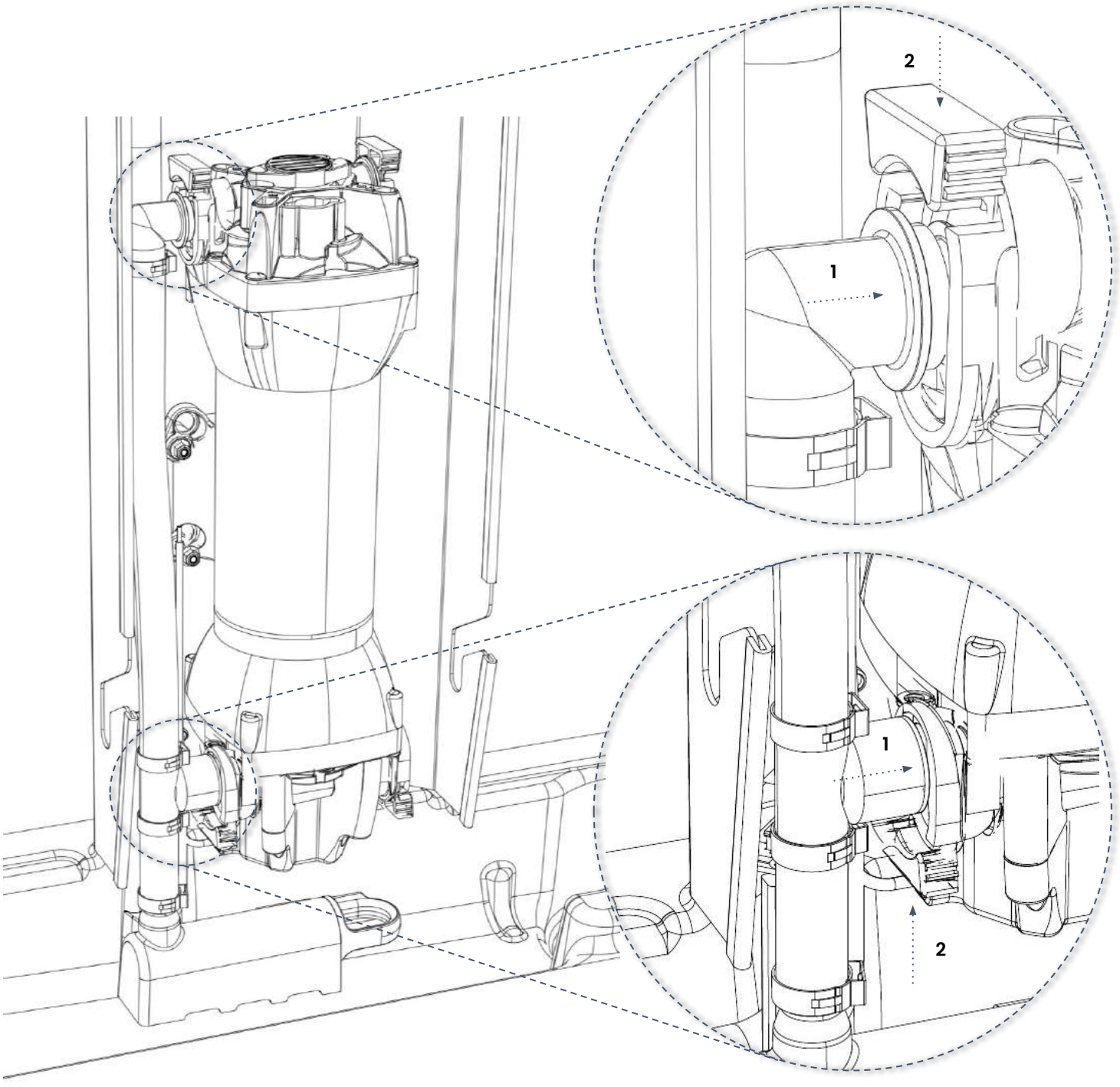

Locate the two horizontal lock fittings on the **Pump Intake Manifold** and align them both to its designated location on the pump, before securing them in place. Use the two blue collar clamps attached to the pump to secure these fittings.

NOTE: This should be an air tight connection. Ensure that both lock fittings are in proper placement prior to securing them in place using the blue collar clamps.

STEP 12: Connect the Dispensing Compartment Hose and Power

A

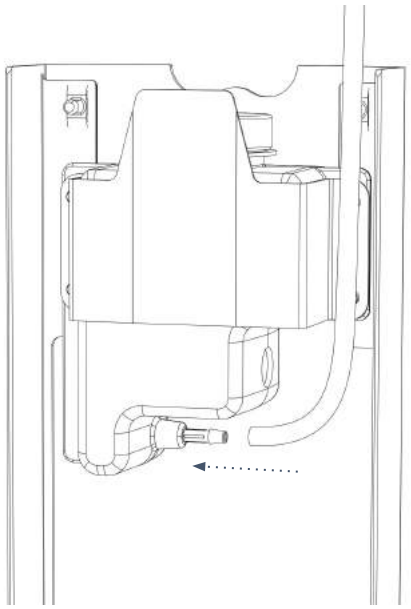

B

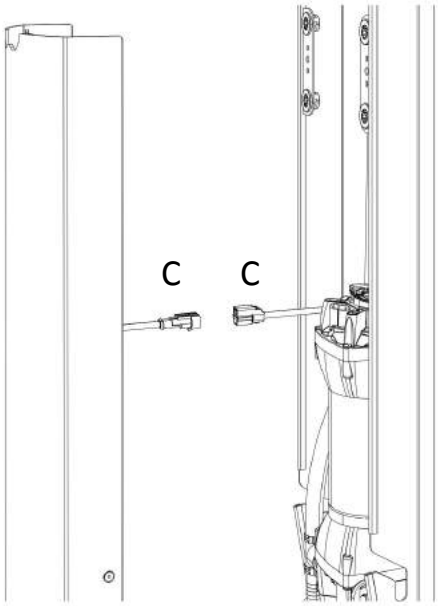

In the Rainstick, locate and connect the dispensing compartment hose to the nipple connector of the dispensing compartment, located behind the **Bottom Enclosure**. Connect the power supply by joining the wires marked, "**C**".

STEP 13: Attach the Bottom Enclosure and the Reservoir Passive Plug

A

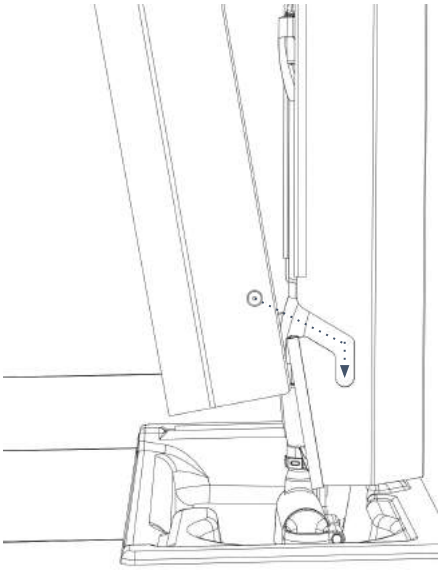

B

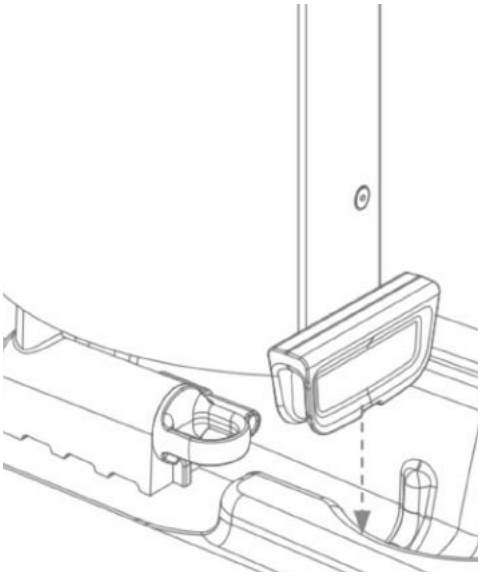

On each side of the **Bottom Enclosure** is a pivot joint. Gently guide these joints to its holders located on each side of the RainStick and lock it in place. These pivot joints do not require any screws. Next, take the **Reservoir Passive Drain Plug** and place it on its holder inside the Reservoir. It is normal to see a small opening underneath, between the plug and its holder.

STEP 14: Position and Attach the Foot Spout

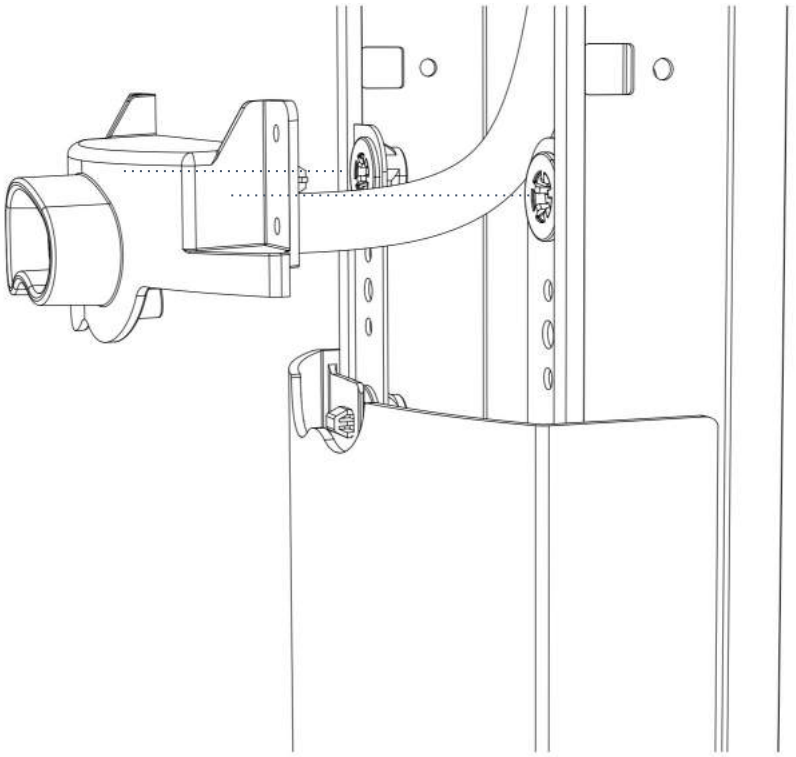

A

With the **Bottom Enclosure** closed, slide and position the **Foot Spout**, guiding the hose inside the RainStick.

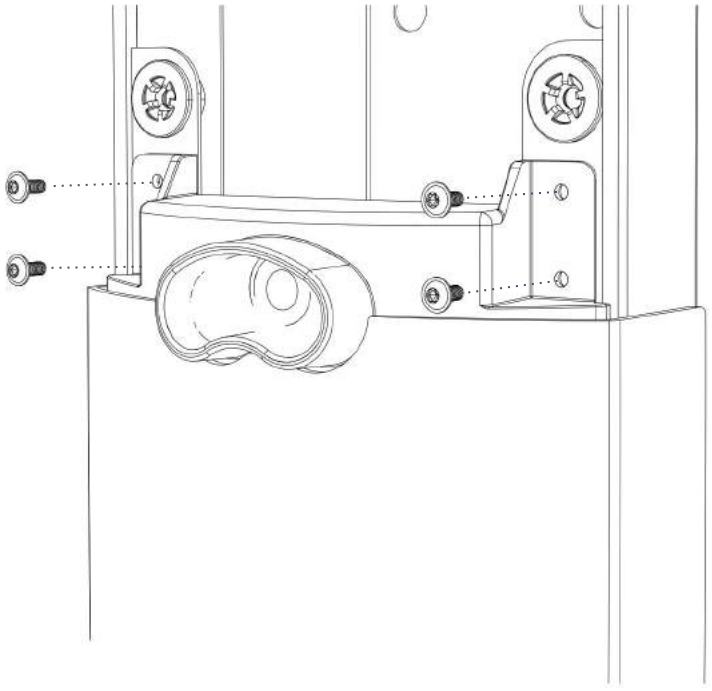

B

Lock it in place using the provided screws. Before doing so, ensure that the **Bottom Enclosure** is fully closed prior to securing the **Foot Spout** in place.

STEP 15: Reattach the Main Controller and Top Enclosure

A

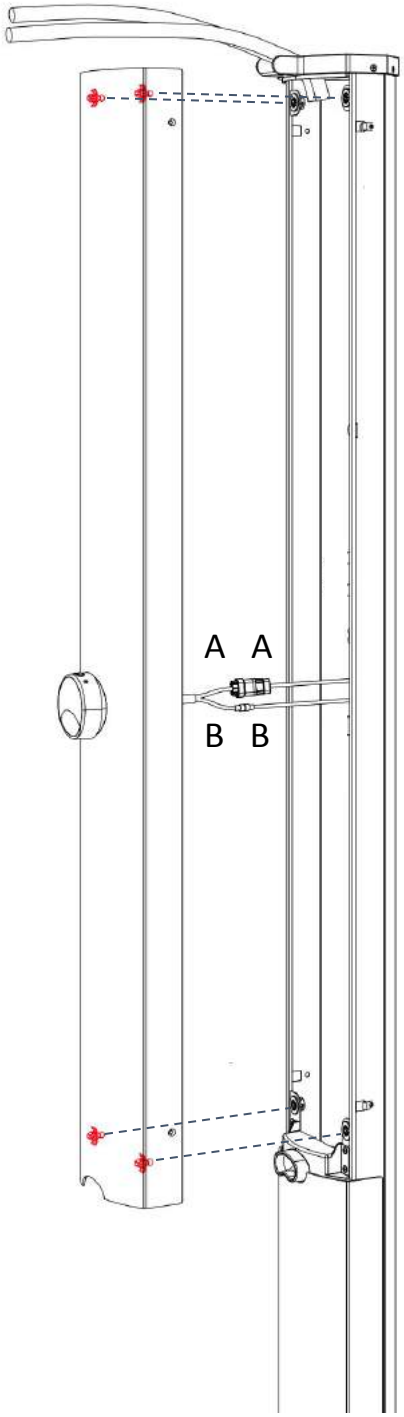

B

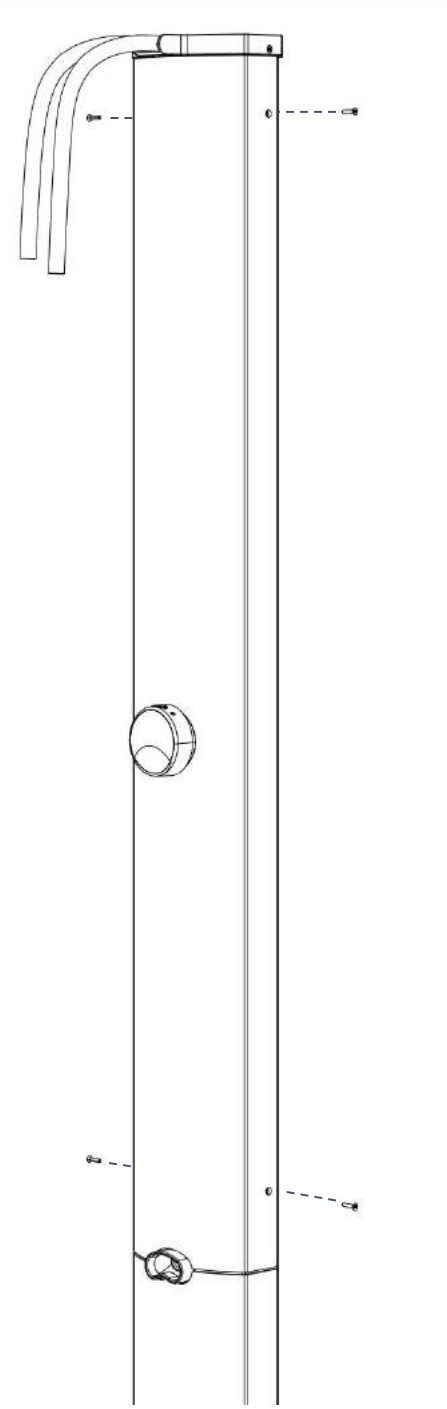

Follow the labels and connect "**A**" wires together, and "**B**" wires together before aligning and attaching the **Top Enclosure** to the RainStick. Use the snaps inside the Top Enclosure to secure it to the RainStick and use the provided screws on both of its sides to secure it in place.

STEP 16: Connect the Shower Arm and Showerhead Connector

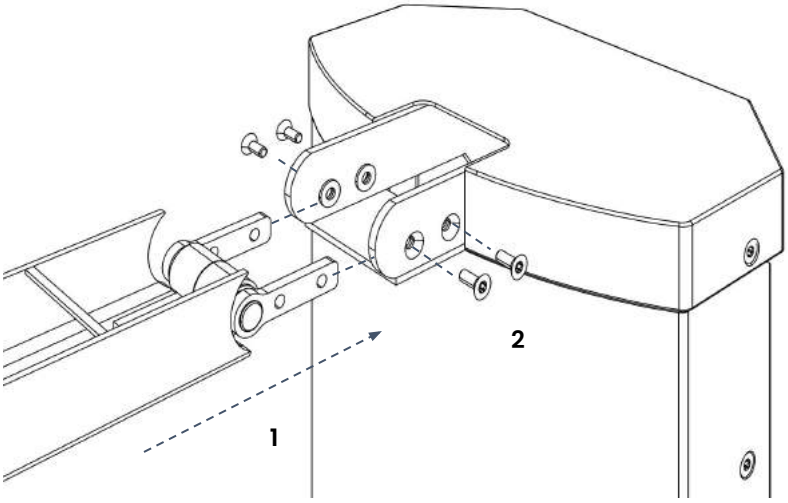

A

Slide the **Shower Arm**'s hinge into the top cap of the RainStick and use the screws provided to connect the two components together.

B

Route the traditional water line **(grey hose)** through the **Shower Arm**, to the **Showerhead Connector** provided. Route the circulating water line **(black hose)** through the **Shower Arm** and through its bottom opening.

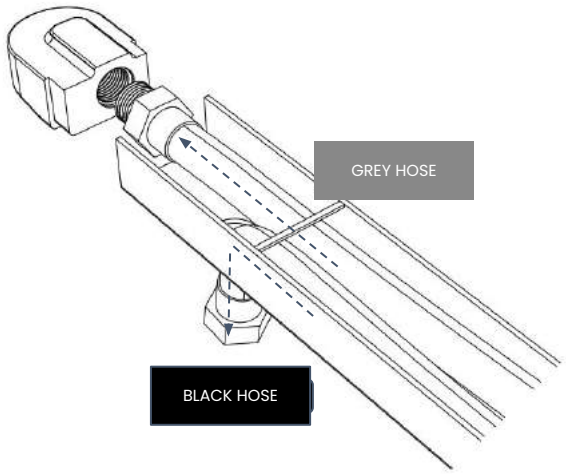

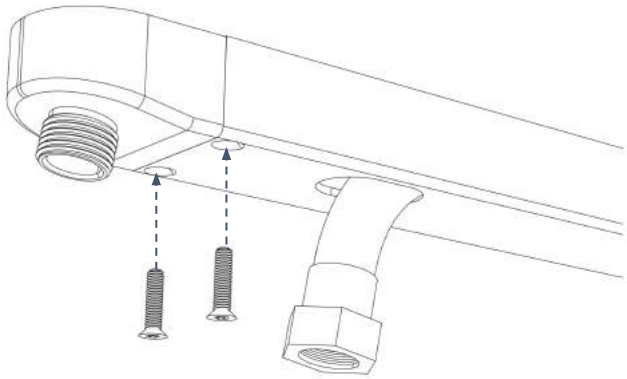

C

Screw in the **Showerhead Connector** using the screws provided.

STEP 17: Connect the Showerhead and place the Reservoir Cover Plate

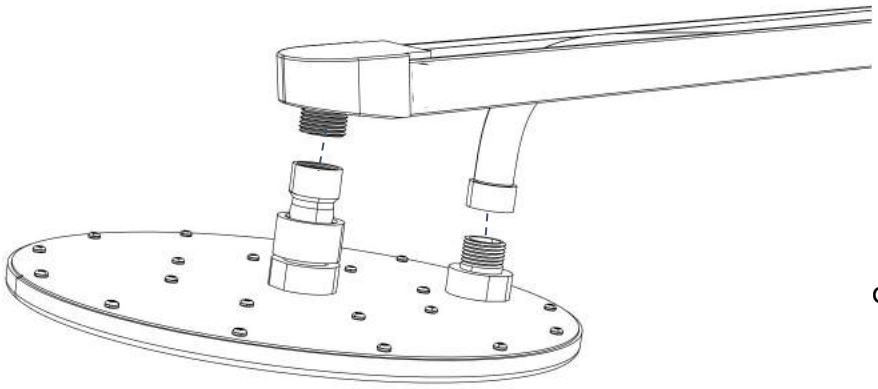

A

Connect the **Showerhead** to the **Showerhead Connector** and the water lines (grey and black hose) to the **Showerhead**.

B

Place the **Reservoir Cover Plate** on the Reservoir.

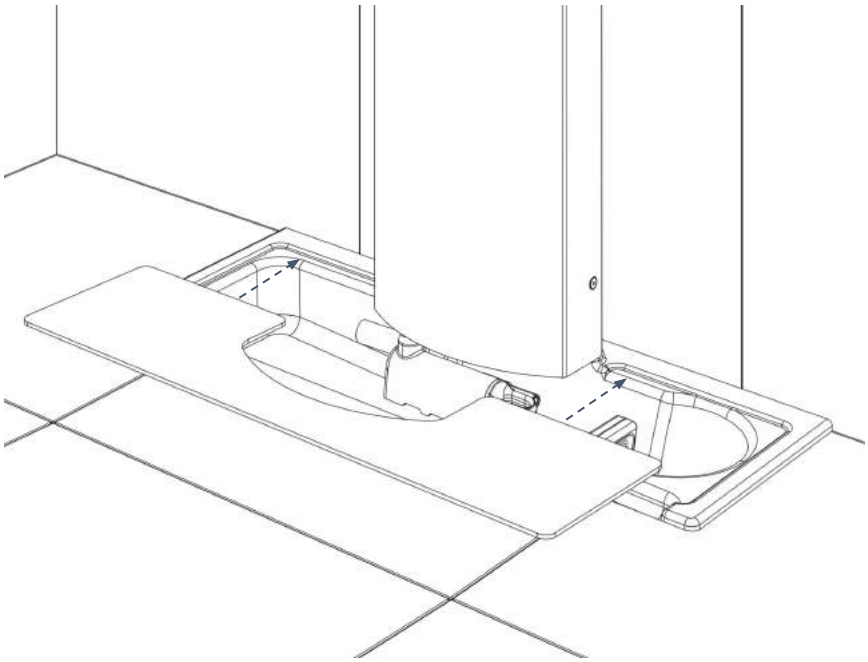

STEP 18: Complete the Installation



Download on the App Store

GET IT ON Google Play

Refer to the provided **Care and User Guide** for instructions on how to properly power on and use the RainStick. Download the **RainStick Shower App**, available for Apple and Android devices, to access the full user experience.

ARCHITECTURAL: WATER AND POWER ROUGH-IN FRONT ELEVATION

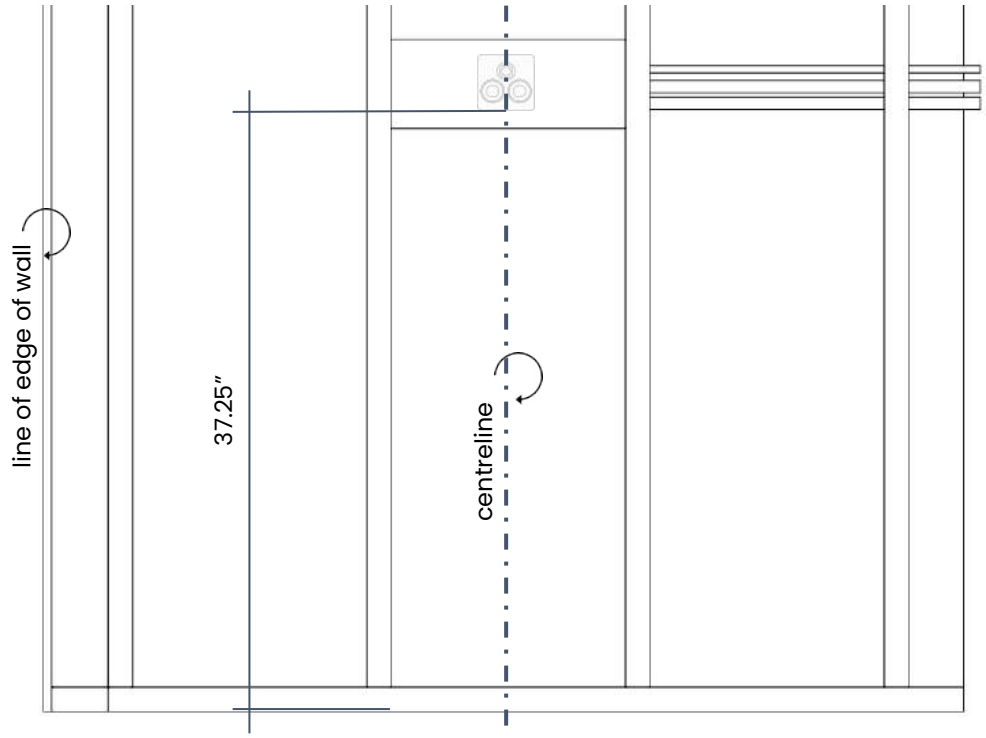

1. Determine centreline of installation.
2. Measure **37.25"** vertically from subfloor centreline.
3. Use the **Utility Bracket** provided and align its **Notch** to the marked **37.25"** location.
4. Trace the rough-in holes using a writing tool.
5. Use a hole saw to create openings.
6. Route water and power supply to its designated locations.

ARCHITECTURAL: RESERVOIR DIMENSION LEVELS

(Edge of reservoir must be levelled prior to anchoring)

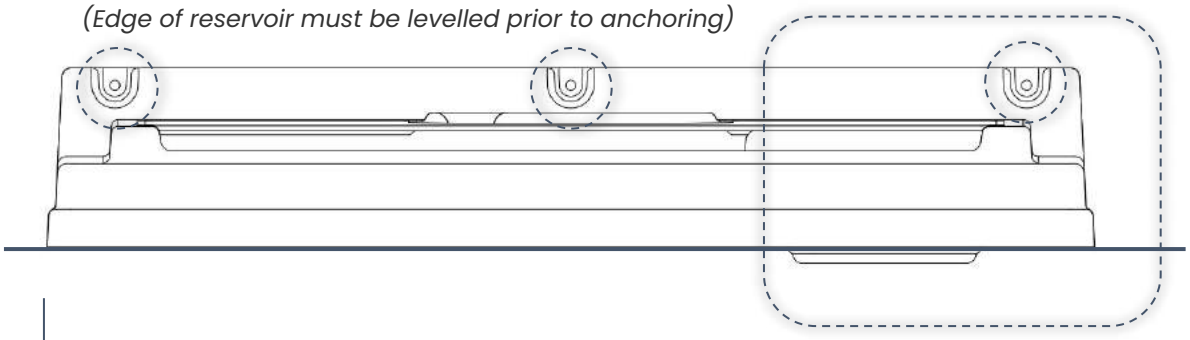

Blown Up Section Below

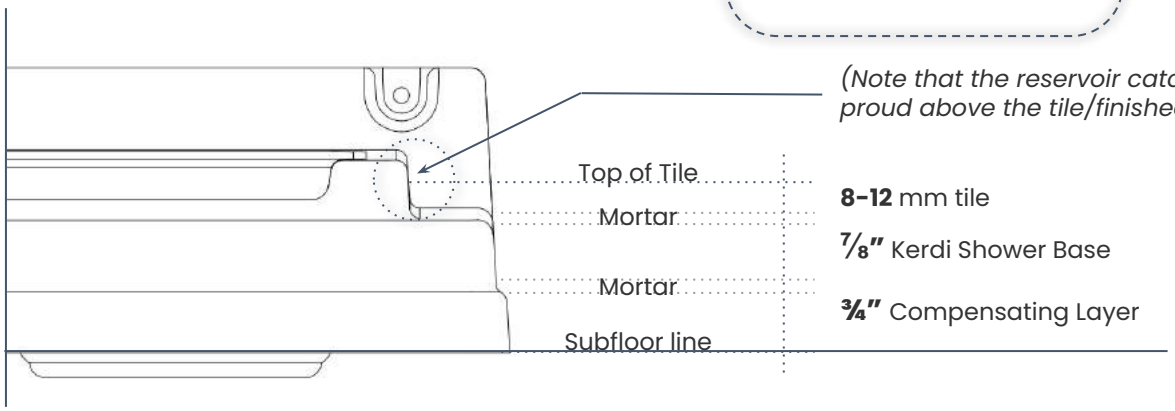

(Note that the reservoir catchment will sit proud above the tile/finished floor line)

8-12 mm tile

7/8" Kerdi Shower Base

¾" Compensating Layer

***Thinset Mortar (½" x ½" U-Notched Trowel) to be used in between levels.**

ARCHITECTURAL: SURROUNDING TILE TO RESERVOIR INSTALLATION DETAILS

Wall Detail Section-thru Drawing
(Not to Scale)

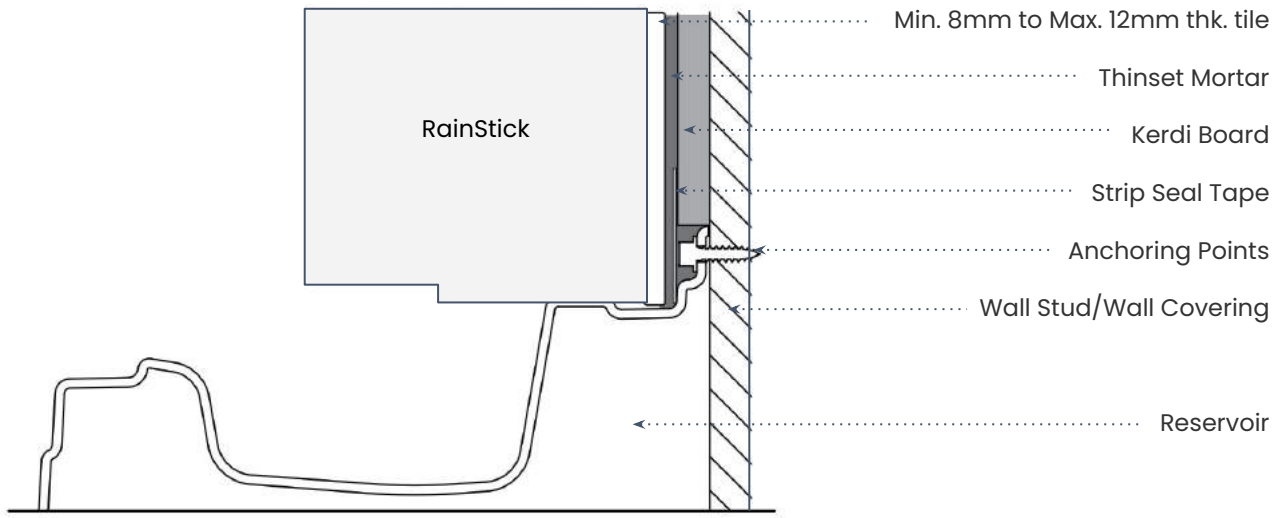

***Thinset Mortar (½" x ½" U-Notched Trowel) to be used in between levels.**

Floor Level Detail Section-thru Drawing
(Not to Scale)

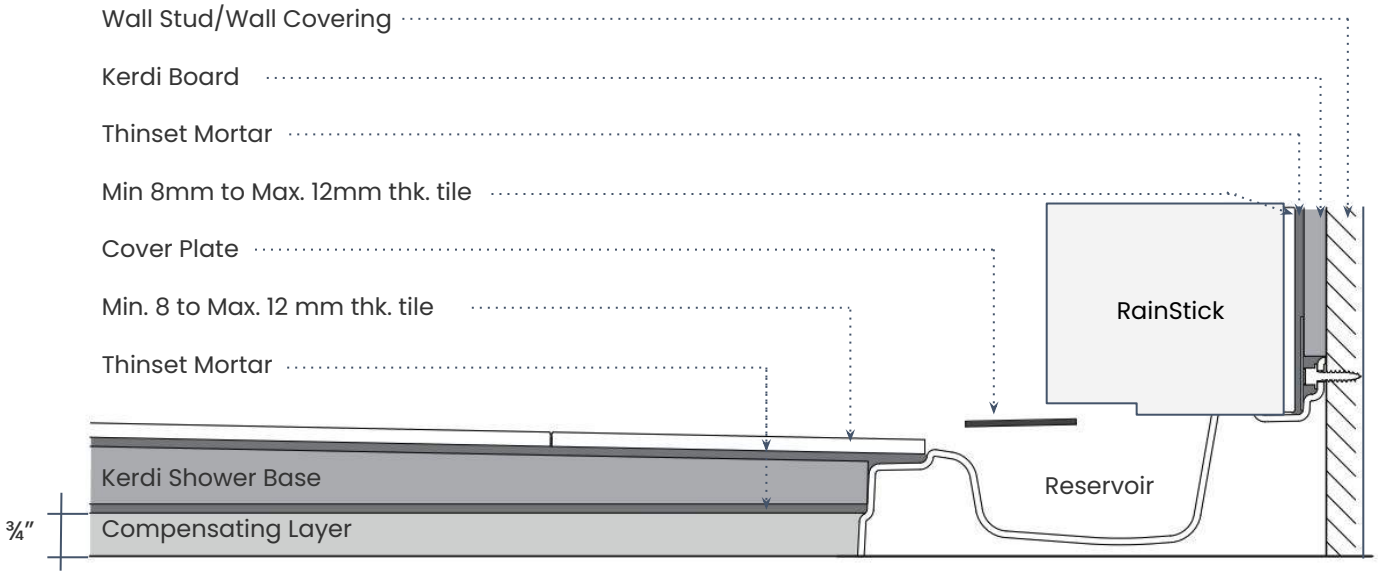

***Thinset Mortar (½" x ½" U-Notched Trowel) to be used in between levels.**

ARCHITECTURAL: FLOORING AND RESERVOIR DETAIL

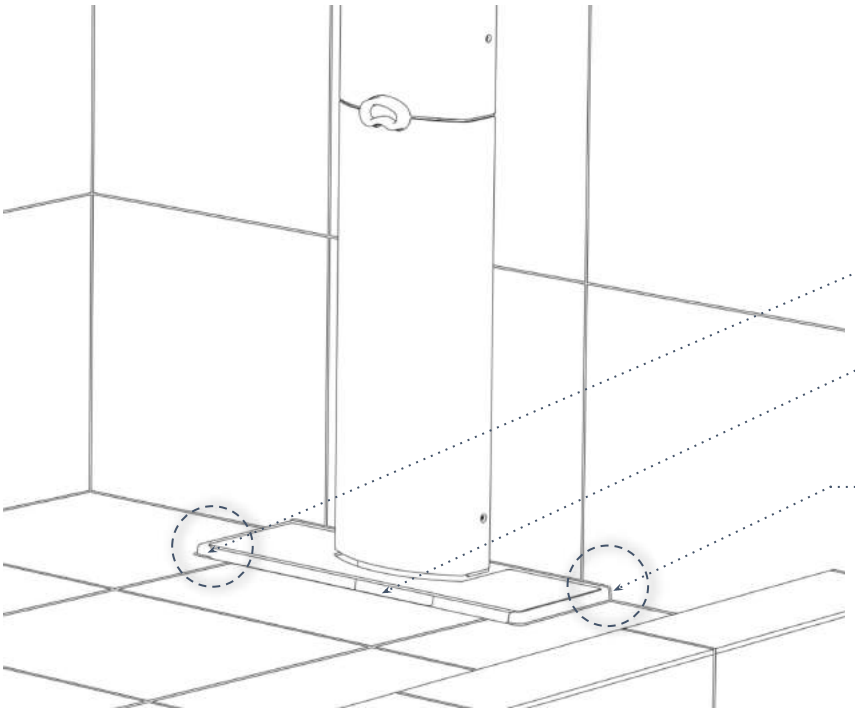

Ensure that all exposed sides of the **Reservoir** is properly sealed and waterproofed

Catchment opening of the **Reservoir** to remain unobstructed at all times

ATTENTION: The **Reservoir** perimeter to sit proud above floor tile

PLUMBING: DRAIN TO P-TRAP PARTS ASSEMBLY

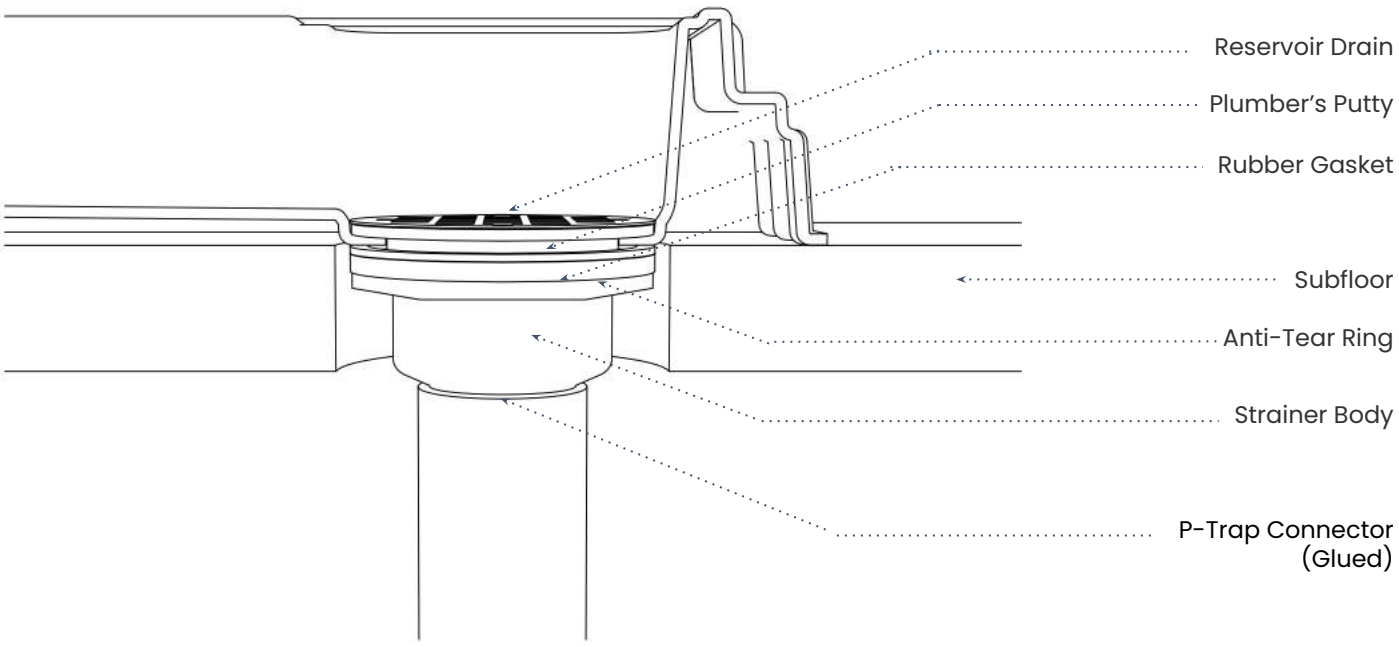

PLUMBING: SHOWERHEAD AND ARM ASSEMBLY

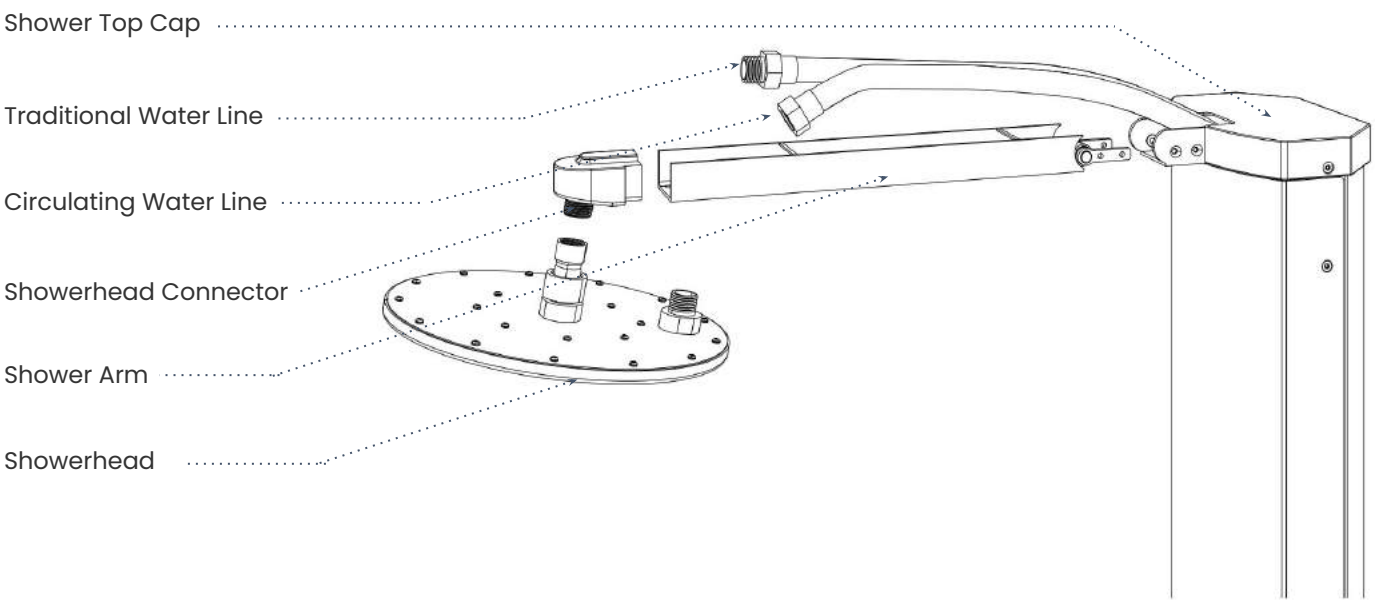

ELECTRICAL: FIELD WIRING DIAGRAM

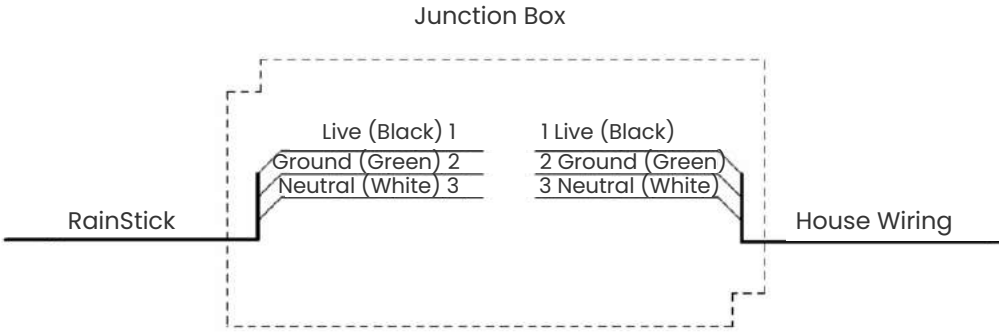

Connect using Wire Nuts provided.

1. Detach the Junction Box Cover.
2. Feed the house wiring through the lower cable gland.
3. Using the supplied wire nuts, connect live-live, ground-ground, and neutral-neutral.
4. Tighten the house wiring cable gland.
5. Fit wires and wire nuts within the Junction Box.
6. Re-attach the Junction Box Cover

LIMITED WARRANTY

Pledge Resource Managers Inc. (d/b/a RainStick Shower) ("**RainStick**") warrants to the original consumer purchaser that the RainStick Shower and the RainStick Handheld Shower (the "**RainStick Products**") are free from material defects in material and workmanship under conditions of normal installation, use and care for a period of two (2) years from the date of purchase, provided that the original consumer purchaser owns the same home in which the RainStick Products were first installed. This warranty cannot be transferred or assigned.

WHAT RainStick WILL DO

RainStick will repair or replace, free of charge, during the applicable warranty period (as described above), any part or finish that proves defective in material and/or workmanship under normal installation, use and care. If repair or replacement is not practical, RainStick may, at its sole discretion, elect to refund the purchase price in exchange for the return of the product. These are the original consumer purchasers exclusive remedies.

WHAT IS NOT COVERED

This warranty does not cover:

(a) damage to a RainStick Products resulting from a cause other than a material defect in material or workmanship, including, without limitation, misuse, abuse, use not in accordance with the RainStick user guide or unreasonable use of the RainStick Products;

(a) damage to a RainStick Products resulting from neglect, poor maintenance, use of a cleaner not recommended by RainStick, failure to follow applicable care and cleaning instructions or accident relating to use of or transportation of the RainStick Product;

(a) any RainStick Product that is purchased from unauthorized dealers or sellers; and

(a) damage to a RainStick Product resulting from assembly or installation error.

SUPPORT

If you have any questions about the warranty or need further assistance, please contact us at warranty@RainStickshower.com.

CLAIMS

For all warranty claims, the original purchase receipt will be required to verify the purchase date.

rainstickshower.com

Copyright © 2023, RainStick Shower

All rights reserved. No part of this document may be reproduced or copied in any form or by any means without a written consent from RainStick Shower. The English language version of this document contains the original instructions. All other language versions are translations of the original instructions.