LED-DL10 AMAX LED DESK LAMP

FOLDABLE & MULTI USE ● 4CCT ● 2USB ● WIRELESS PHONE CHARGER ● PORTABLE

Specifications:

Description:

LED desk lamp is designed to be soft, stable, non-flickering light. Fast and easy wireless cellphone, smart watch and AirPod charger. 14W support wireless charge, 2 USB ports (5v 2.4A). Left and right top diffuser spectrum 90 degree movable. It remembers the brightness level of your last use and it will automatically return to the previous setting when turned on next time. Portable easy to to carry and store. It is a great application for office, school or home.

Features :

PC+ALUMINUM material
Multi-angle foldable
0%-100% fully dimmable with just a simple touch
4 color temperatures (3000K, 3500K, 4000K,5000K)
2 USB charging ports (5V 2.4A)
Support wireless charging (14W)
Left and Right Top diffuser spectrum 90 Degree Movable

Performance:

Input Power	36W
Lamp Power	10W
Input Voltage	100V-240V
Input Frequency	50/60Hz
Power Factor	≥0.50
Lumen	500
4CCT	3000K/3500K/4000K/5000K
CRI	90+
LPW	50
Life	50,000 hrs
Warranty	5 years Limited
Dimension	14" x 16" x 4.5''
Certification	cETLus Classified
Accessories	12V 3A Adaptor with 4' power cord

Catalog Number:

Item	Finish	Color Temp.	CRI	Voltage
LED-DL10/WT	White	3000K-5000K	90+	100V-240V
LED-DL10/BLK	Black	3000K-5000K	90+	100V-240V

Amax Lighting, Inc.
10268 Santa Fe Springs Road, Santa Fe Springs, CA 90670
Tel: 562-945-5221 Fax: 562-464-1664
www.amaxlighting.com

Image:





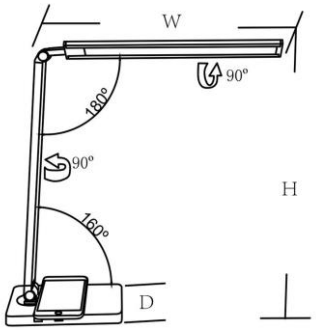

2 USB (5V 2.4A) W=14" H=16" D=4.5"