4" Box Trim Ring

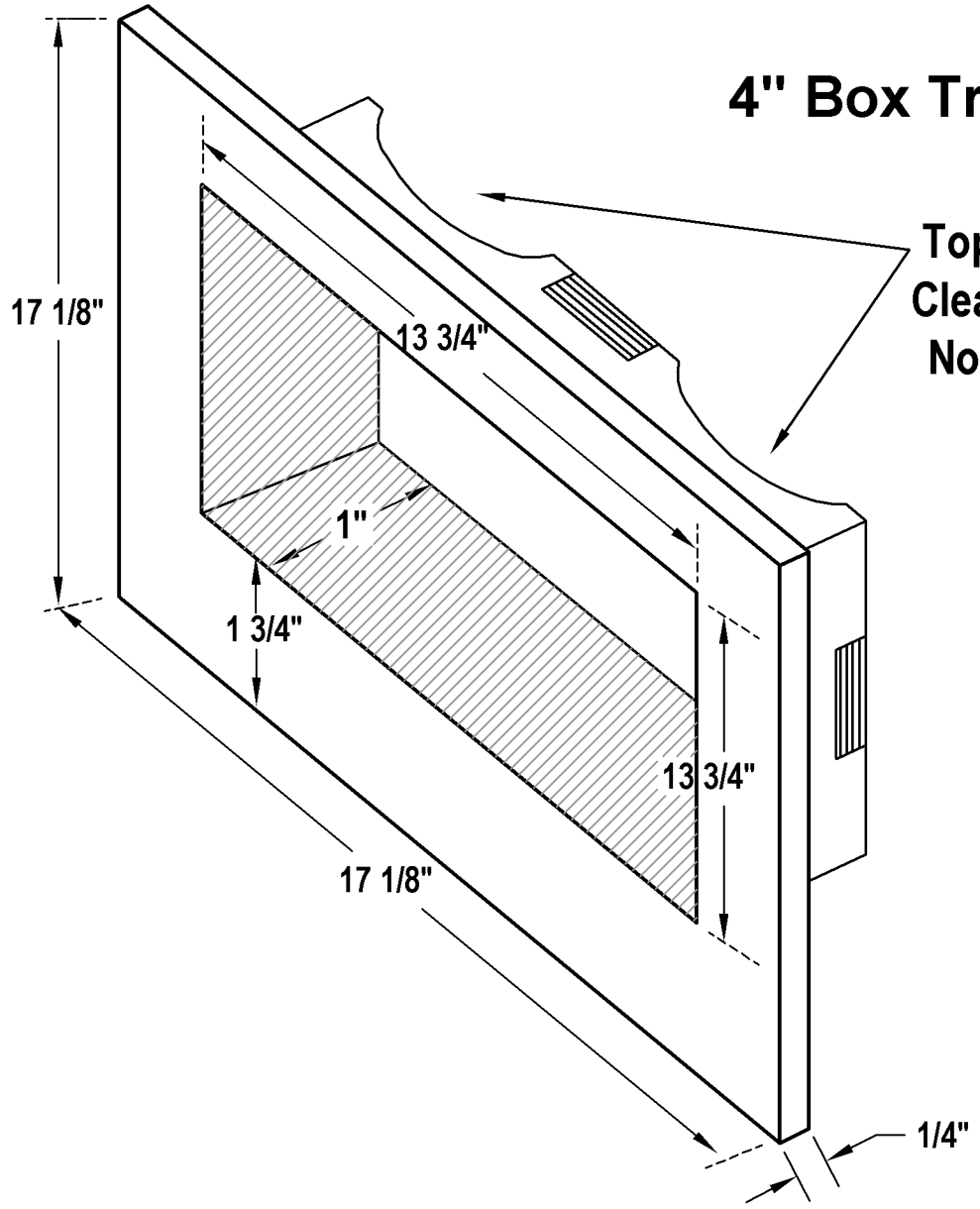

22415 N. 18th Drive
Phoenix, AZ 85027
Office: 480-346-8240
www.newconstructionsolutions.com

CONSTRUCTION
SOLUTIONS

4" BOX UNIVERSAL
TRIM RING
DIMENSION VIEW